Department of Electrical Engineering
香港城市大學
City University of Hong Kong

LLC Resonant Converter for Data Centers

LIU Yuxi ECE
Supervisor: Dr. Jiang Chaoqiang

Abstract

Data centers play a key role in IT communications and are increasingly popular. Although powered by low DC voltage, they consume large amounts of energy. This project focuses on the design of an LLC resonant converter, with the aim of performing ideal DC/DC conversion, which is crucial for data centers. It is mainly implemented by background study, LTspice schematic design, circuit building and analysis.

Background

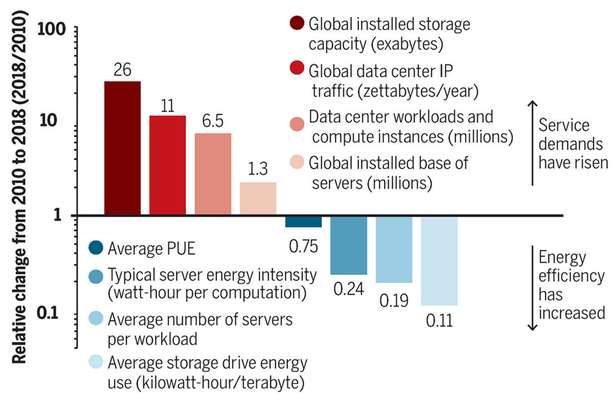

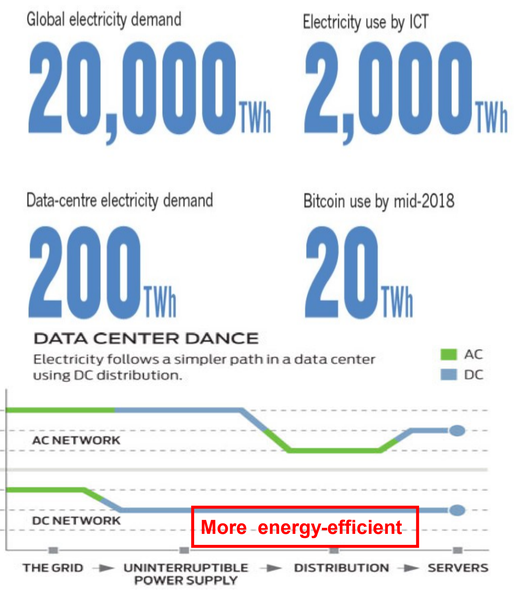

Data Centers

- Growing demand
- Operate ceaselessly
- 1% of global electricity
- ≈ 300 million HK families of three

Problems

- High cost
- Over consumption of energy
- Environmental issues

Methodology

An LLC Resonant Converter

- Cost-effective, Environmentally-friendly
- Compact, High efficiency

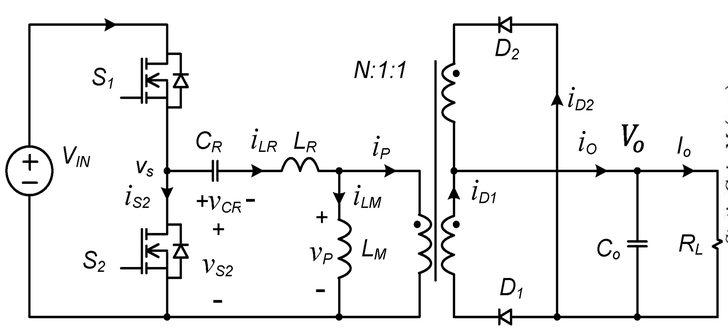

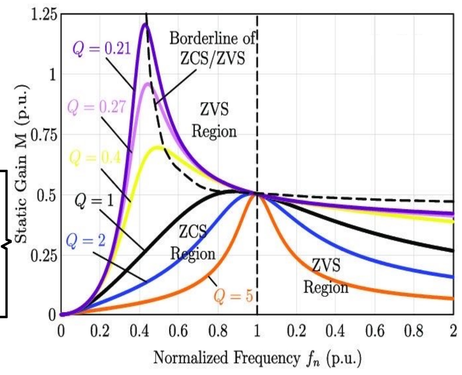

$$f_r = \frac{1}{2\pi\sqrt{LC}}$$

$$G_{max} = 2n(v_{out} + v_D)/v_{in_{min}}$$

$$Q = \frac{\left[k + \frac{G_{max}^2}{(G_{max}^2 - 1)}\right]^{\frac{1}{2}}}{kG_{max}}$$

$$C_r = \frac{1}{2\pi f_r R_{ac} Q}$$

$$DC\ gain = \left\{\left[1 + \frac{1}{k}\left(1 - \frac{1}{f_n^2}\right)\right]^2 + \left[Q\left(f_n - \frac{1}{f_n}\right)\right]^2\right\}^{-1/2}$$

Implementation

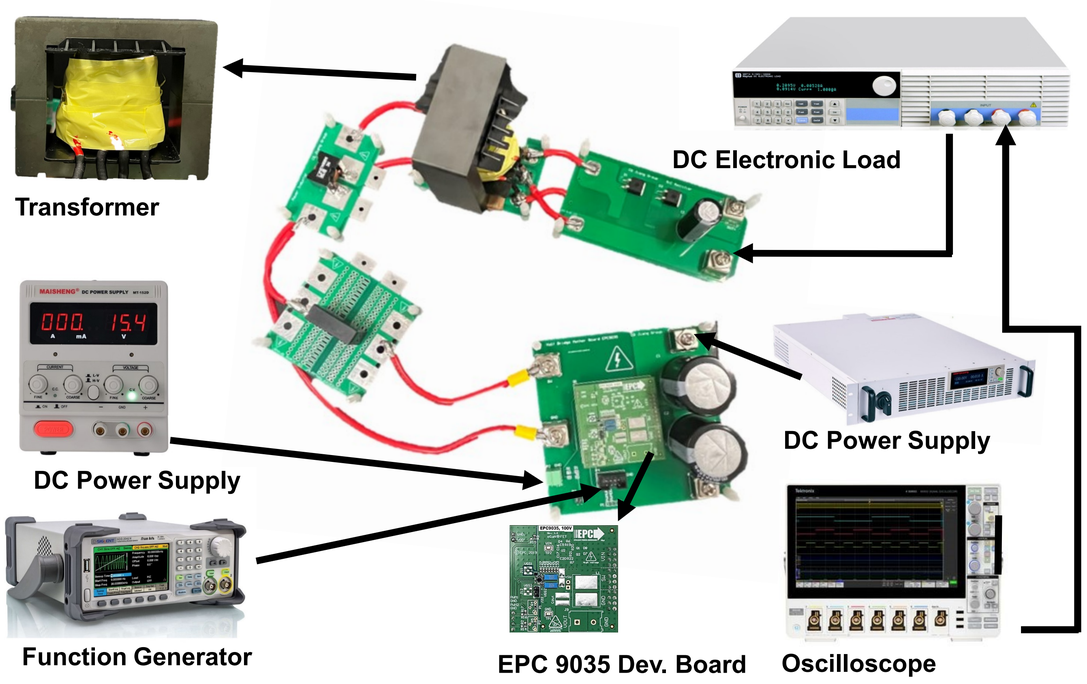

Results

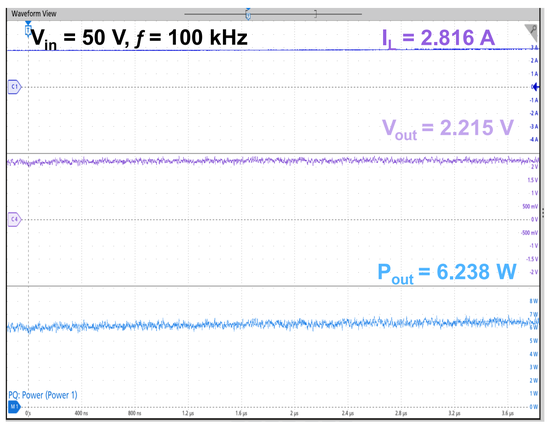

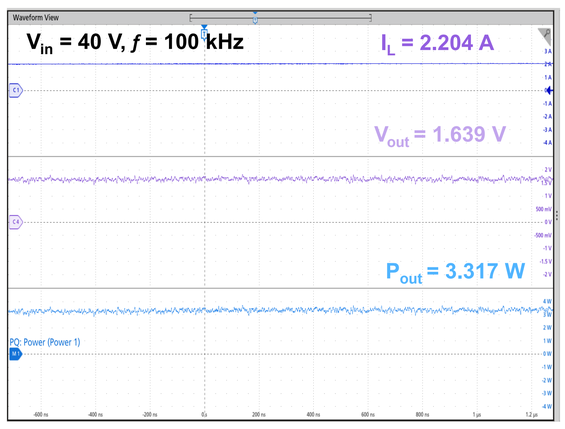

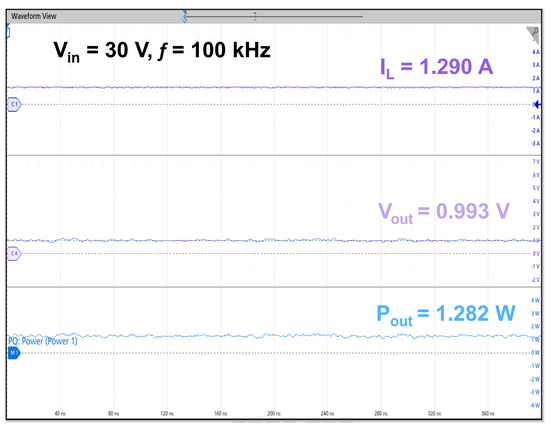

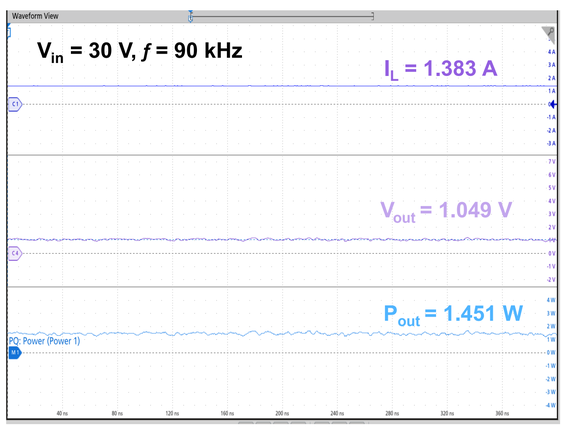

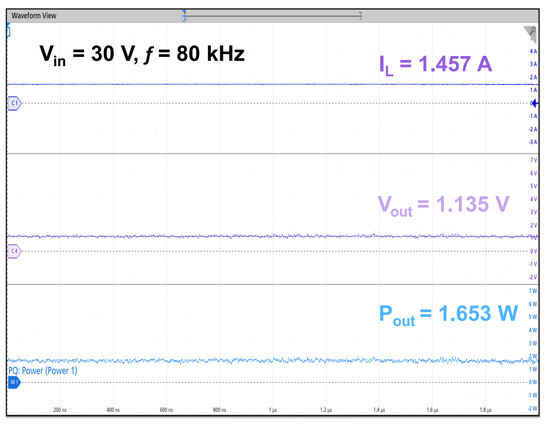

V_{in} \ f	100 kHz	90 kHz	80 kHz
30 V	0.993 V	1.049 V	1.135 V
40 V	1.639 V	\	\
50 V	2.215 V	\	\

Conclusion

Based on results, the principle of the design was proved to be correct, and an LLC resonant converter was successfully designed and built up, which was able to perform DC/DC conversion according to various requirements.